KRAUSMANN POWER TOOLS

ΗΛΕΚΤΡΙΚΗ ΣΚΟΥΠΑ ΣΤΑΧΤΗΣ / ΣΚΟΝΗΣ ΜΕ ΦΥΣΗΤΗΡΑ 1200W

ASH / DUST VACUUM CLEANER WITH BLOWER 1200W

5360

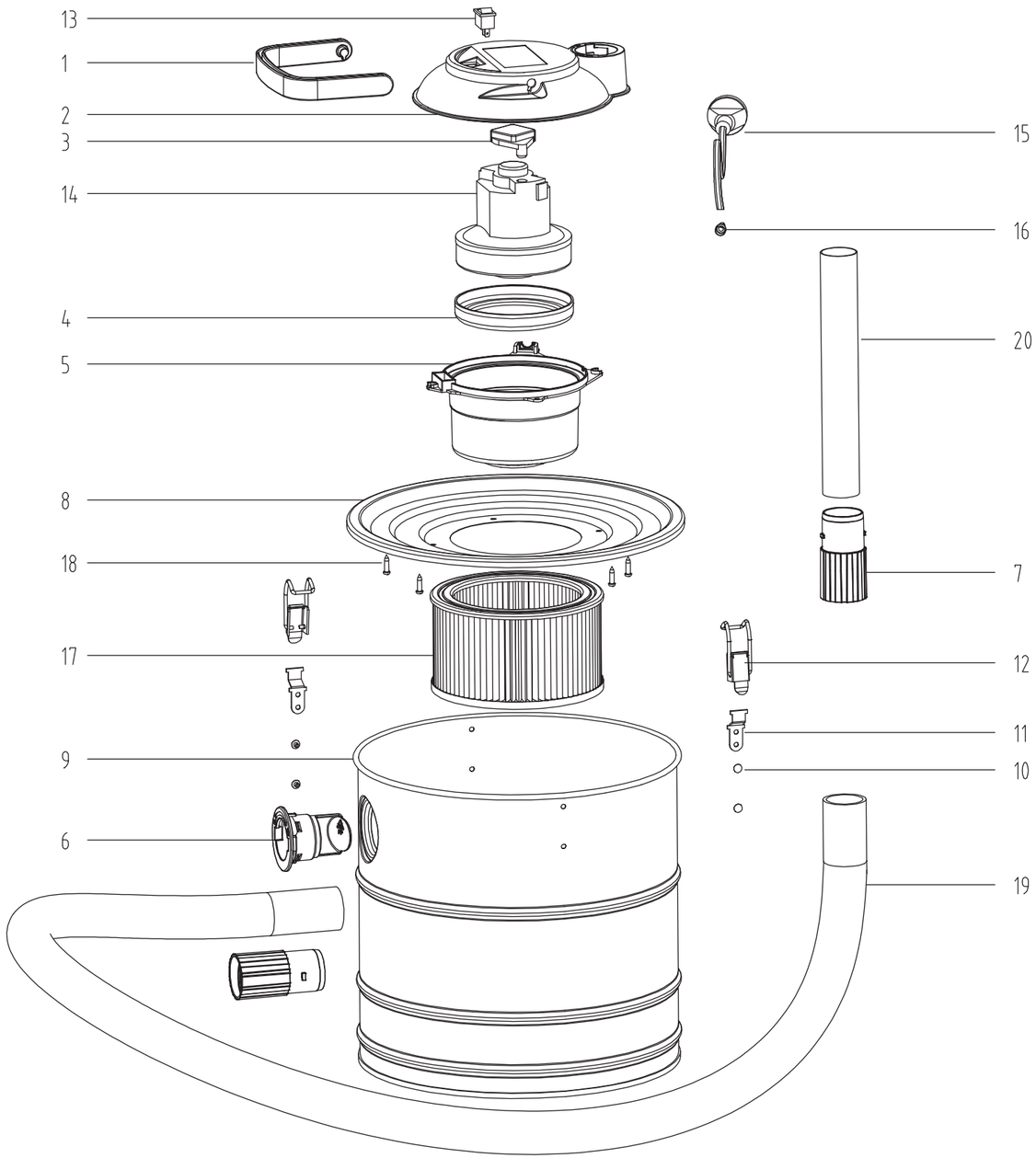

No.	ΠΕΡΙΓΡΑΦΗ	ΠΟΣ.
1	Handle	1
2	Motor house	1
3	Motor fixing block	1
4	Motor shock - proof ring	1
5	Motor base	1
6	Wind - in mouth	1
7	Hose cannula	2
8	Tank cover	1
9	Tank	1
10	Metal rivet	4
11	Under part of clip	2
12	Clip	2
13	Switch	1
14	Alu motor	1
15	Cable	1
16	Wire connector	1
17	Hepa filter	1
18	Screw	4
19	Metal hose	1
20	Alu tube	1